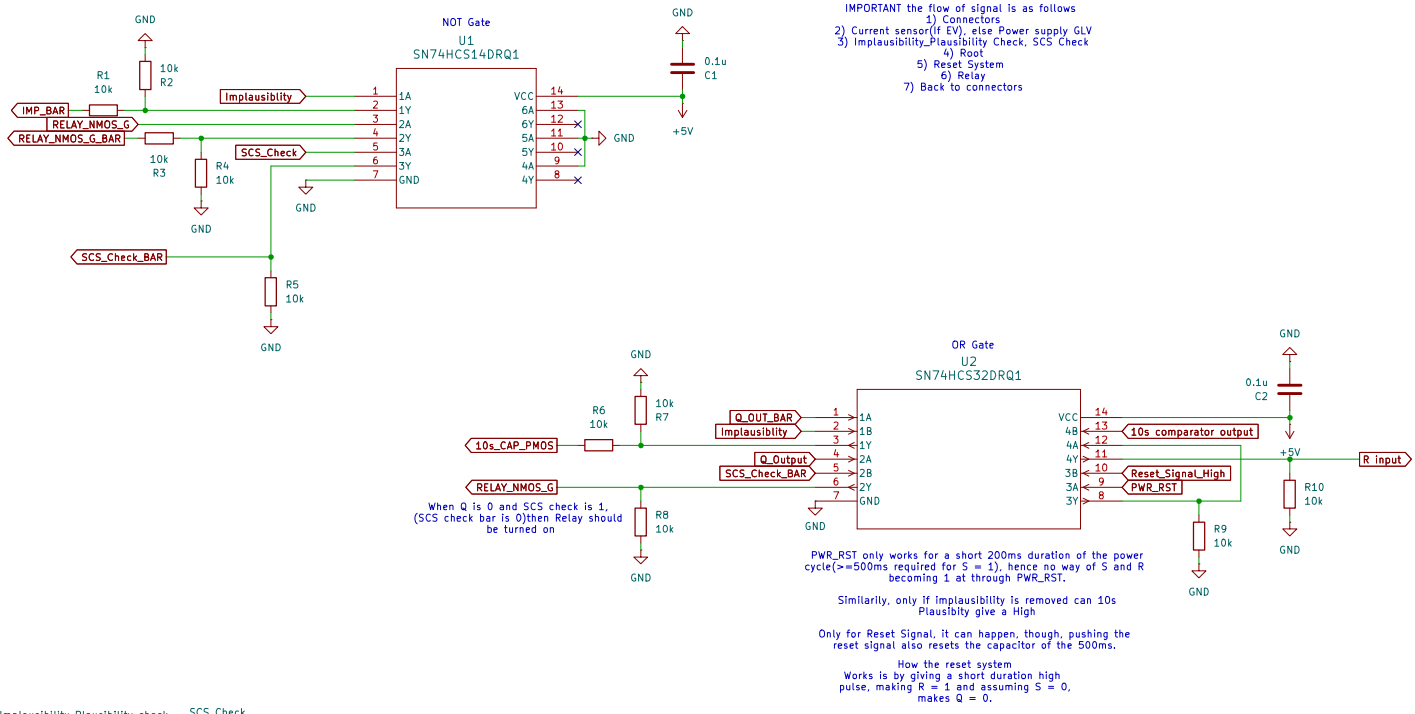
NOT Gate
U1
SN74HCS14DRQ1
IMPORTANT the flow of signal is as follows
1) Connectors
2) Current sensor(If EV), else Power supply GLV
3) Implausibility_Plausibility Check, SCS Check
4) Root
5) Reset System
6) Relay
7) Back to connectors
IMP_BAR
RELAY_NMOS_G
RELAY_NMOS_G_BAR
Implausiblity
SCS_Check
SCS_Check_BAR
R1 10k
R2 10k
R3 10k
R4 10k
R5 10k
0.1u C1
+5V
GND
OR Gate
U2
SN74HCS32DRQ1
Q_OUT_BAR
Implausiblity
Q_Output
SCS_Check_BAR
10s_CAP_PMOS
RELAY_NMOS_G
10s comparator output
Reset_Signal_High
PWR_RST
R input
R6 10k
R7 10k
R8 10k
R9 10k
R10 10k
0.1u C2
When Q is 0 and SCS check is 1,
(SCS check bar is 0)then Relay should
be turned on
PWR_RST only works for a short 200ms duration of the power
cycle(>=500ms required for S = 1), hence no way of S and R
becoming 1 at through PWR_RST.
Similarly, only if Implausibility is removed can 10s
Plausibity give a High
Only for Reset Signal, it can happen, though, pushing the
reset signal also resets the capacitor of the 500ms.
How the reset system
Works is by giving a short duration high
pulse, making R = 1 and assuming S = 0,
makes Q = 0.
Implausibility_Plausibility check
File: IMP_P Check.kicad_sch
SCS Check
File: SCS check.kicad_sch
Probing points
File: Probing points.kicad_sch
Current Sensor
File: Current Sensor.kicad_sch
Power Supply
File: Power Supply GLV.kicad_sch
Relay
File: Relay.kicad_sch
Connectors
File: Connectors.kicad_sch
Reset system
File: Reset system.kicad_sch
Mounting Holes
H1 MountingHole_Pad
H2 MountingHole_Pad
H3 MountingHole_Pad
H4 MountingHole_Pad
Designed by Aditeya Sarkar
Ashwa Racing
Sheet: /
File: BSPD.kicad_sch
Title: BSPD XX6-C/E
Size: A4
Date:
Rev: 31
KiCad E.D.A. 10.0.0
Id: 1/9

Total power consumption :
1) Leds – 40 mA
2) ICs – 40 mA
3) Dividers – 1–5m A
4) Supply – 20 mA (max)
5) Relay – 40mA
Total – 145–150 mA

Regulated Power Output

Reverse polarity protection + overcurrent protection

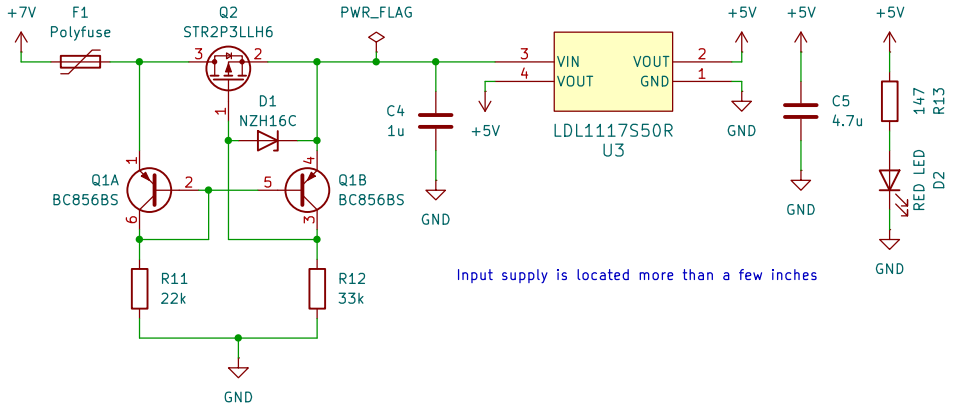

EV only

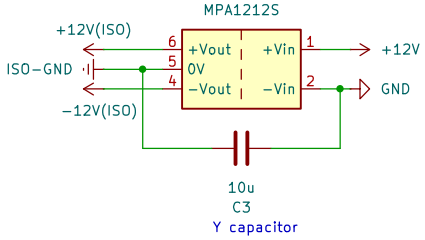

Sheet: /Power Supply/
File: Power Supply GLV.kicad_sch

Title:

Size: A5	Date:	**Rev:**
KiCad E.D.A. 10.0.0		Id: 2/9

Probing points

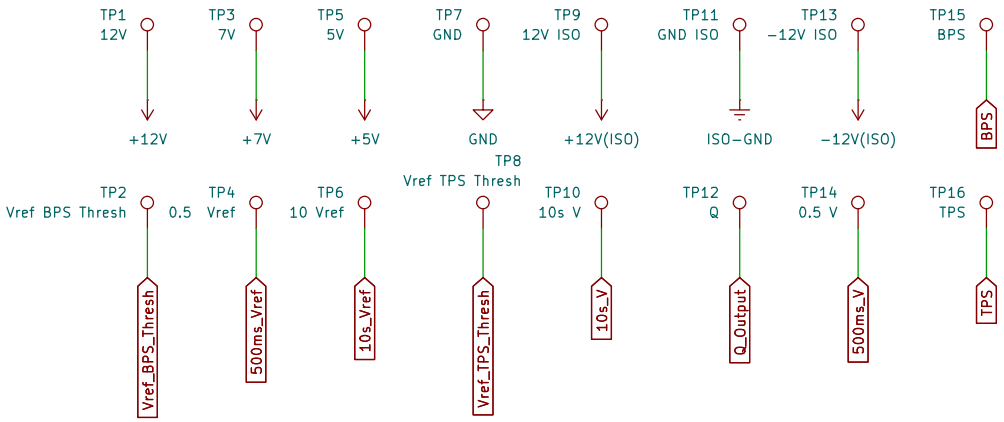

Sheet: /Probing points/		
File: Probing points.kicad_sch		
Title:		
Size: A5	Date:	**Rev:**
KiCad E.D.A. 10.0.0		Id: 3/9

Memory Element

Used to store if the SDC relay was triggered due to 500ms, PoR changes Q = 0 and 500ms changes it to 1. There is no possibility of 1/1 SR input due to inherent design

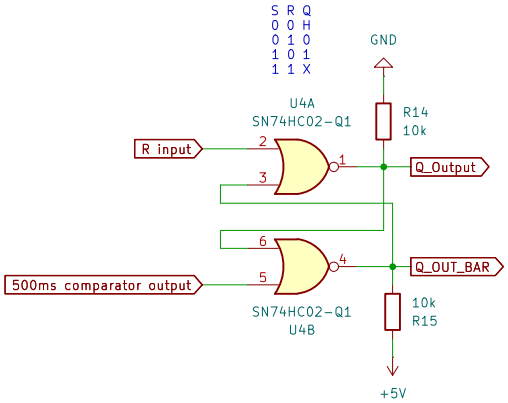

Power Reset

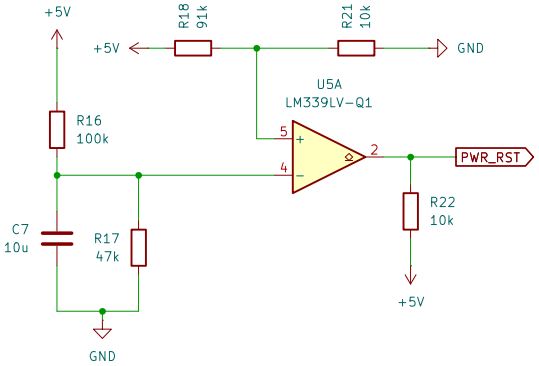

Reset duration sets the C and the R
200ms High Pulse

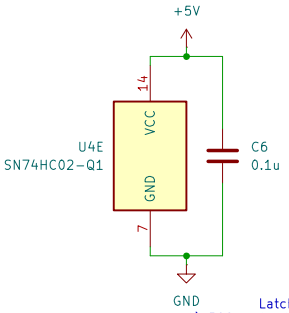

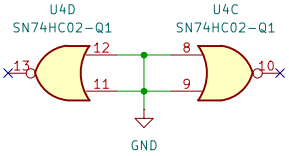

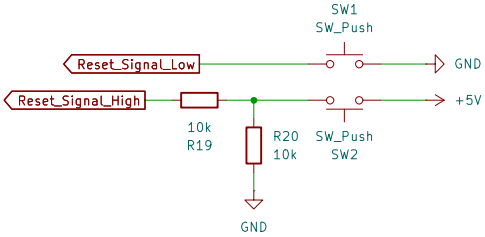

Latch value is determined by 3 things
1) 500ms Implaus -> Implausibility bar -> Implausibility
2) PoR
3) 10s Plaus -> Implaus + Qbar

If Imps is there, 10s -> 0, 500ms is there, 10s -> 0
PoR is high for approx 100-150ms, hence R /= S = 1 at the same time. Hence no chance of implausible state

Q determines state of relay

Relaybar = Bar(Scs bar + Q)

Hence,

SCS	Q	SCSbar	Relaybar
0	0	1	0
0	1	1	0
1	0	0	1
1	1	0	0

Hence when Q = 0
(i.e. either PoR/10s reset the latch to zero and 500ms is 0) and SCS is high (i.e. no error) and hence SCS bar is Low will the relay be switched on

Sheet: /Reset system/
File: Reset system.kicad_sch

Title:

Size: User	Date:	**Rev:**
KiCad E.D.A. 10.0.0		Id: 4/9

SCS Short Check

Normally gives HIGH, incase of short, gives LOW
Checks for shorts to GND with values lower than 0.05V
and to +5V with values higher than 4.95V

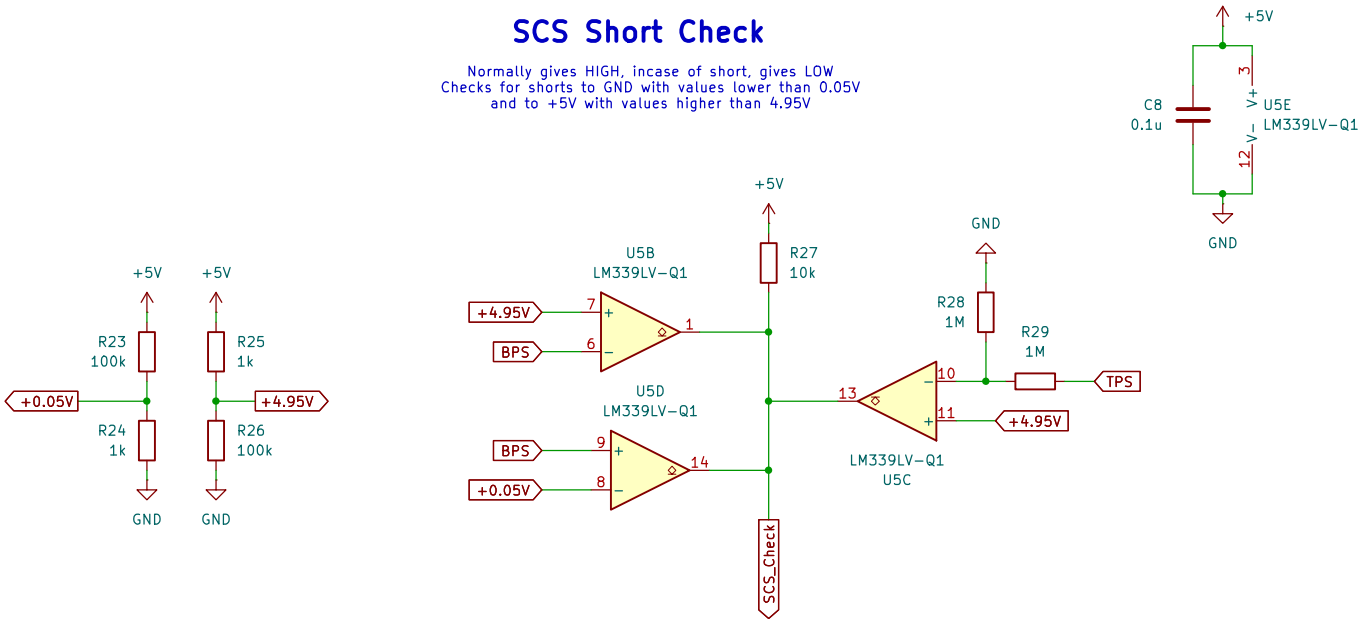

Sheet: /SCS Check/		
File: SCS check.kicad_sch		
Title:		
Size: A5	Date:	**Rev:**
KiCad E.D.A. 10.0.0		Id: 5/9

Current sensor output Biasing Circuit (EV only)

Changes −4V to +4V differential signal to 0.5V to 4.5V single ended signal

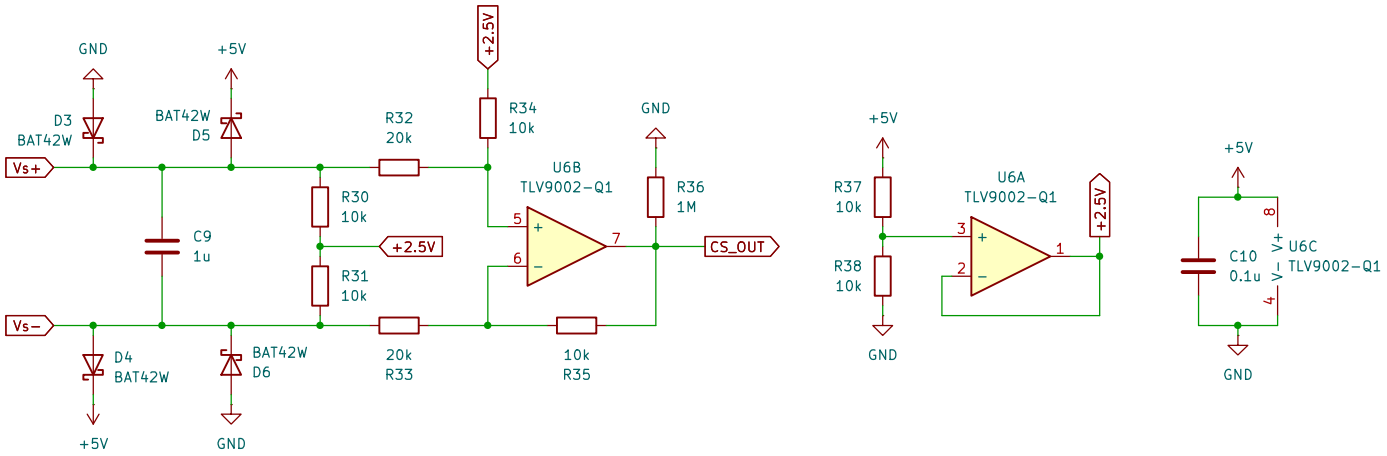

Sheet: /Current Sensor/
File: Current Sensor.kicad_sch

Title:

Size: A5	Date:	**Rev:**
KiCad E.D.A. 10.0.0		Id: 6/9

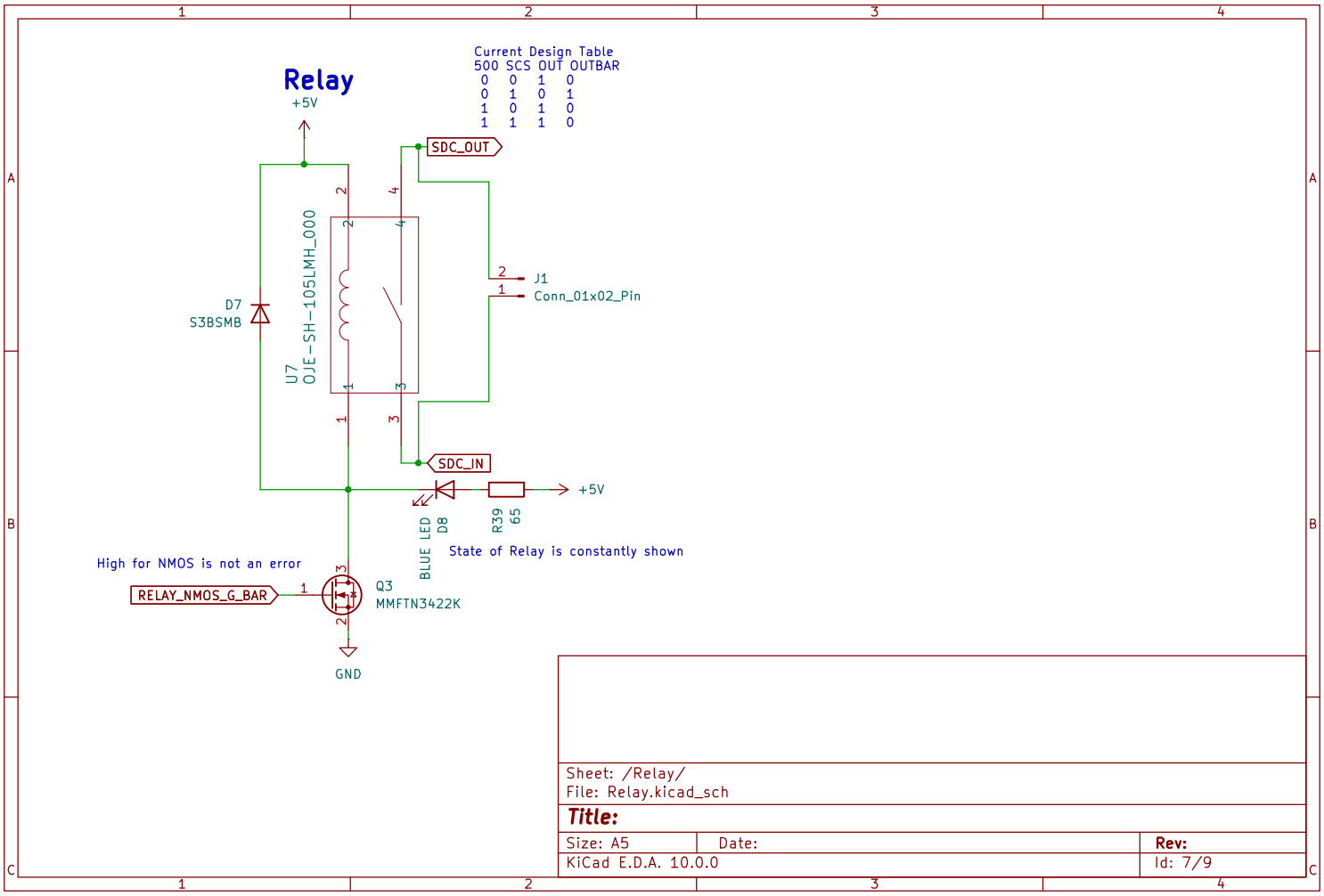

Sheet: /Relay/
File: Relay.kicad_sch

Title:

Size: A5	Date:	**Rev:**
KiCad E.D.A. 10.0.0		Id: 7/9

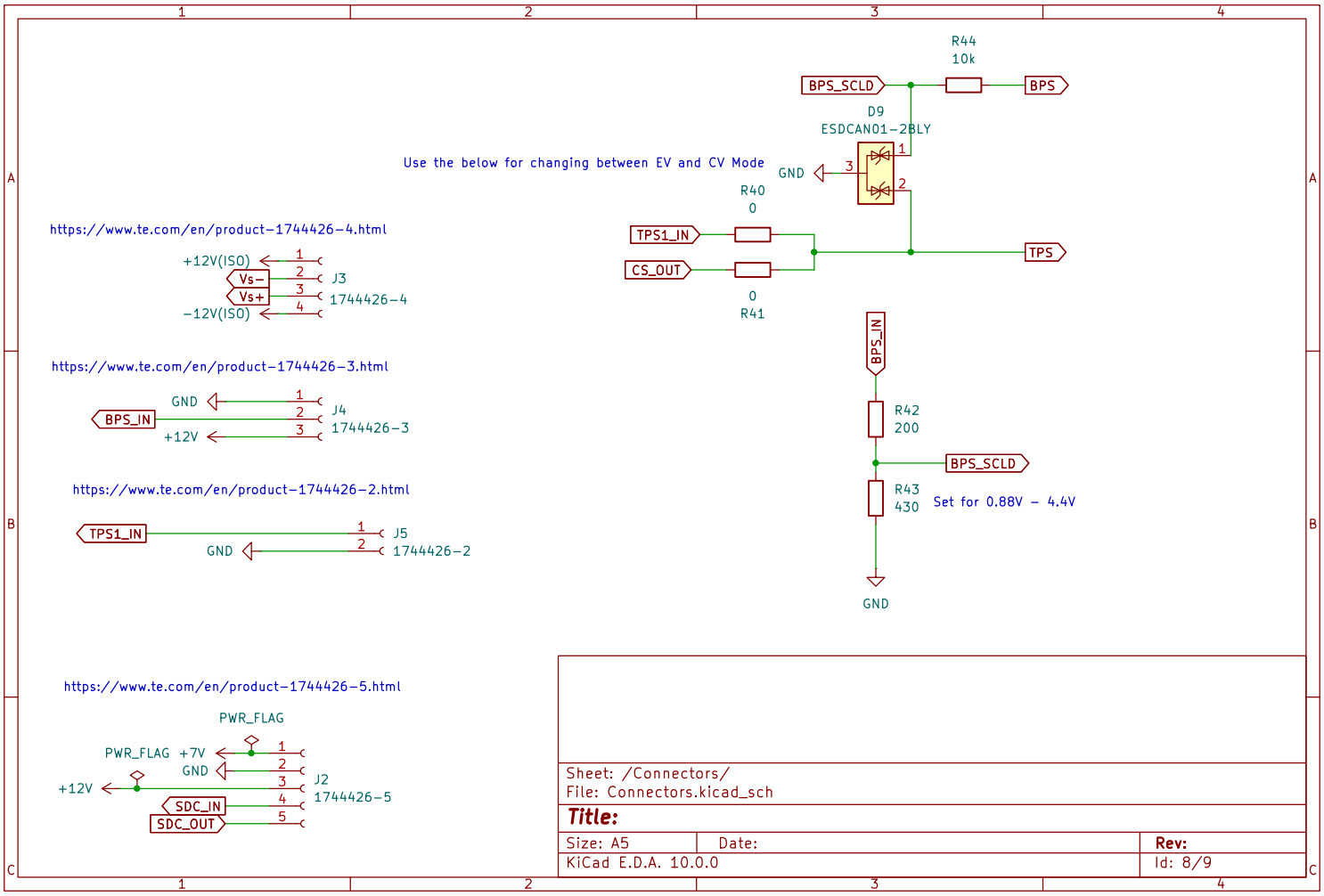
R44
10k
BPS_SCLD
BPS
D9
ESDCAN01-2BLY
GND
Use the below for changing between EV and CV Mode
R40
0
TPS1_IN
CS_OUT
TPS
0
R41
https://www.te.com/en/product-1744426-4.html
+12V(ISO)
Vs-
Vs+
-12V(ISO)
J3
1744426-4
https://www.te.com/en/product-1744426-3.html
GND
BPS_IN
+12V
J4
1744426-3
https://www.te.com/en/product-1744426-2.html
TPS1_IN
GND
J5
1744426-2
BPS_IN
R42
200
BPS_SCLD
R43
430
Set for 0.88V - 4.4V
GND
https://www.te.com/en/product-1744426-5.html
PWR_FLAG
PWR_FLAG
+7V
GND
+12V
SDC_IN
SDC_OUT
J2
1744426-5
Sheet: /Connectors/
File: Connectors.kicad_sch
Title:
Size: A5
Date:
Rev:
KiCad E.D.A. 10.0.0
Id: 8/9

500ms Implausibility check

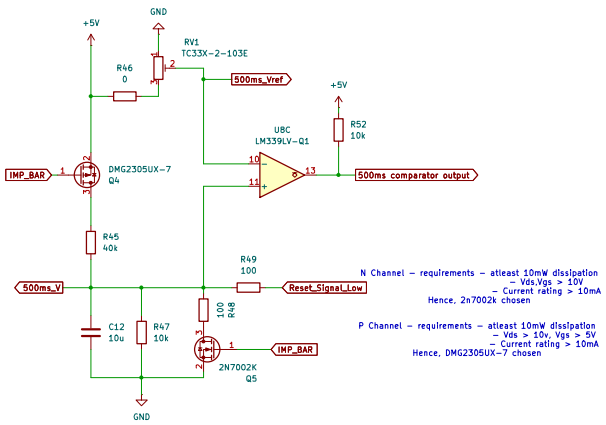

N Channel – requirements – atleast 10mW dissipation
– Vds,Vgs > 10V
– Current rating > 10mA
Hence, 2n7002k chosen

P Channel – requirements – atleast 10mW dissipation
– Vds > 10v, Vgs > 5V
– Current rating > 10mA
Hence, DMG2305UX-7 chosen

10s Plausibility check

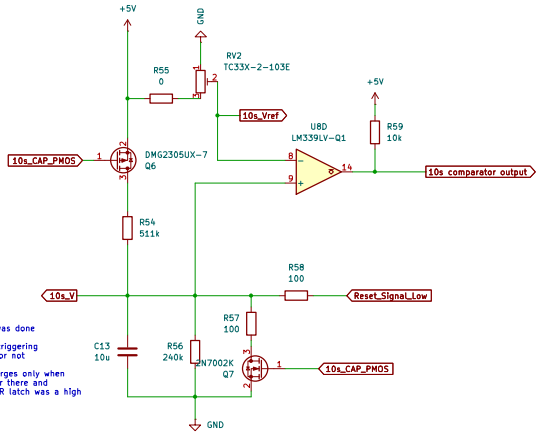

Qbar	Q	Imp	Output
	Q	Qbar	IMP OUT
0	1	0	1
0	1	1	1
1	0	0	0
1	0	1	1

Here Q is the output if
500ms of Implausibility was done

Here IMP is if the BSPD triggering
thresholds are exceeded or not

Hence, 10s capacitor charges only when
Implausibility is no longer there and
the earlier state of the SR latch was a high

Implausibility check

TC33X-2-103E

Normally gives a LOW
Here both BPS and TPS have to
exceed their threshold to get Implausibility to 1

Only when this is High does the state of Imp occur

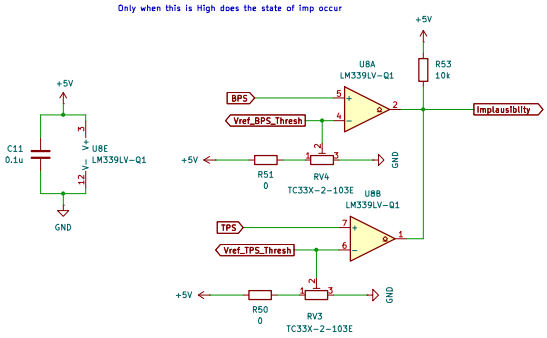

Sheet: /Implausibility_Plausibility check/
File: IMP_P Check.kicad_sch

Title:

Size: User	Date:	Rev:
KiCad E.D.A. 10.0.0		Id: 9/9